THERMA-TRU® DOORS

Classic-Craft®

# OPAQUE FIBERGLASS DOUBLE DOOR w/ or w/out SIDELITES

## INSWING/OUTSWING "NON-IMPACT"

GENERAL NOTES

1. This product has been evaluated and is in compliance with the 9th Edition (2026) Florida Building Code (FBC) structural requirements excluding the "High Velocity Hurricane Zone" (HVHZ).
2. Product anchors shall be as listed and spaced as shown on details. Anchor embedment to base material shall be beyond wall dressing or stucco.
3. When used in areas requiring wind borne debris protection, this product is required to be protected with an impact resistant covering that complies with FBC Sections 1609.1.2 & R301.2.1.2 as follows: Wind Zones 1, 2 & 3: Glazed Sidelites only; Wind Zone 4: Entire System.
4. For 2x stud framing construction, anchoring of these units shall be the same as that shown for 2x buck masonry construction.
5. Site conditions that deviate from the details of this drawing require further engineering analysis by a licensed engineer or registered architect.

**TABLE OF CONTENTS**


| SHEET # | DESCRIPTION |
|---|---|
| 1 | Typical Elevations, Design Pressures & General Notes |
| 2 | Door Panel Details |
| 3 | Sidelite Panel Details |
| 4 | Elevations |
| 5 | Horizontal & Vertical Cross Sections (2X Buck) |
| 6 | Horizontal & Vertical Cross Sections (1X Buck) |
| 7 | Horizontal & Vertical Cross Sections (Direct to Masonry) |
| 8 | Vertical Cross Sections (Thresholds) |
| 9 | Buck Anchoring |
| 10 | Frame Anchoring |
| 11 | Hardware Details |
| 12 | Components |
| 13 | Bill of Materials |


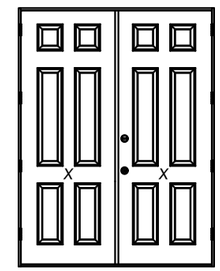


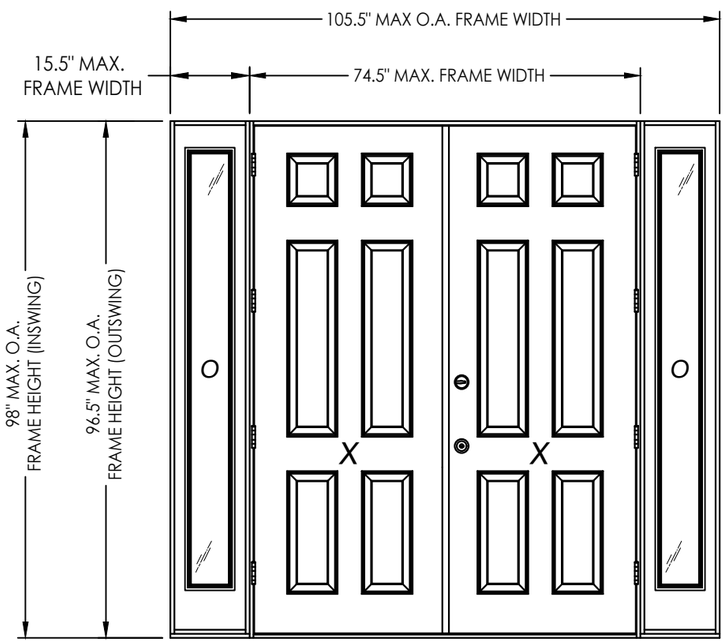


| CONFIGURATION | ASTRAGAL | DESIGN PRESSURE (PSF) INSWING | | DESIGN PRESSURE (PSF) OUTSWING | |
|---|---|---|---|---|---|
| | | POSITIVE | NEGATIVE | POSITIVE | NEGATIVE |
| XX, OXXO | STANDARD | +34.0 | -34.0 | +34.0 | -34.0 |
| XX, OXXO | COASTAL | +47.0 | -47.0 | +47.0 | -47.0 |

L. F. SCHMIDT LICENSE No. 43409 STATE OF FLORIDA PROFESSIONAL ENGINEER

Digitally signed by Lyndon F Schmidt
Date: 2026.08.08 09:21:14 -04'00'

This item has been digitally signed and sealed by **L. F. Schmidt, P.E.** on the date adjacent to the seal.

Printed copies of this document are not considered signed and sealed and the signature must be verified on any electronic copies.

THIS PRODUCT APPROVAL IS VALID ONLY FOR THE STATE OF FLORIDA


Documents Prepared By:
Lyndon F. Schmidt
P.E. No. 43409

RW BUILDING CONSULTANTS, INC.
P.O. Box 230, Valrico, FL 33595
Phone No.: 813.659.9197
FBPE Registry No. 9813


PRODUCT: THERMA-TRU FIBERGLASS DOOR

PART OR ASSEMBLY: TYPICAL ELEVATION, DESIGN PRESSURES & GENERAL NOTES

| NO. | DATE | REVISIONS | BY |
|---|---|---|---|
| 3 | 7/01/26 | UPDATE TO 9TH ED. (2026) FBC | LFS |
| 2 | 8/22/23 | UPDATE TO 8TH ED. (2023) FBC | LFS |
| 1 | 8/05/20 | UPDATE TO 7th ED (2020) FBC | LFS |

DATE: 3/25/20
SCALE: N.T.S.
DWG. BY: RW
CHK. BY: LFS
DRAWING NO.: FL-23955.6
SHEET 1 OF 13

© 2020 R.W. Building Consultants Inc.

Z:\2023 FBC Drawings\Therma-Tru\FL-23955 R4\FL-23955.4-6.dwg

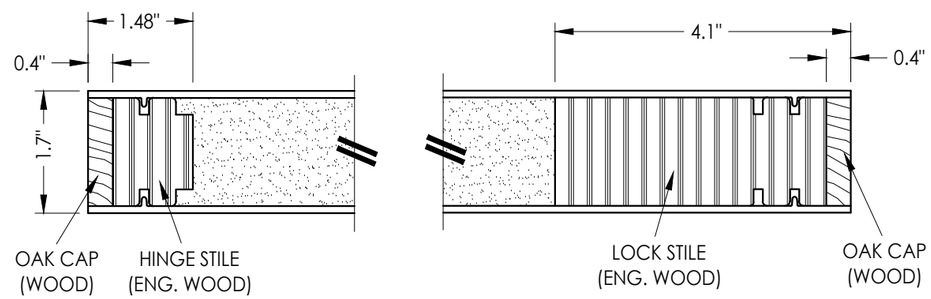


1/2 **HORIZONTAL CROSS SECTION**

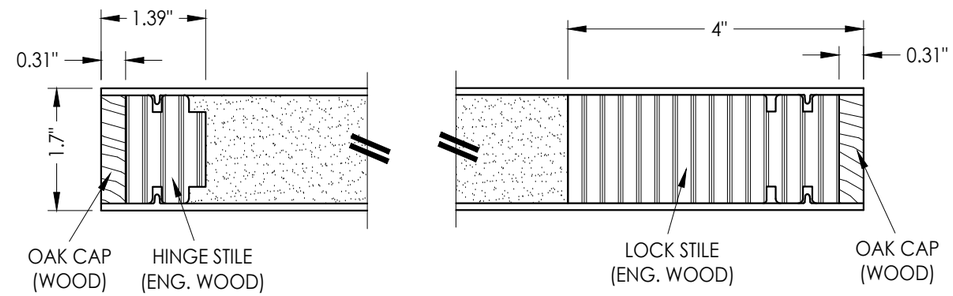


2/2 **HORIZONTAL CROSS SECTION**

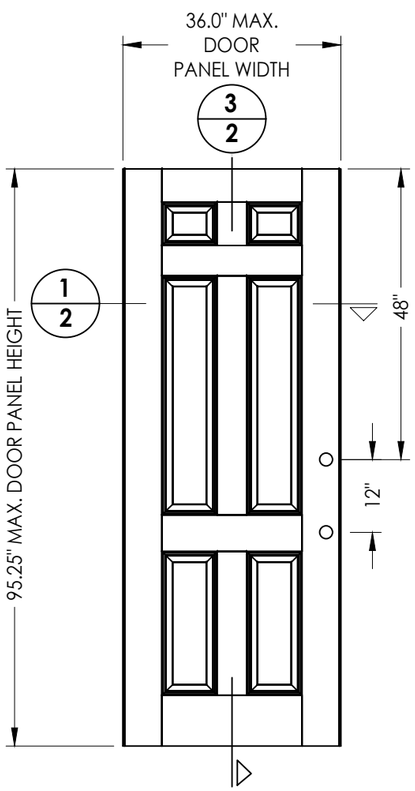


40 **DOOR PANEL**
BOOK

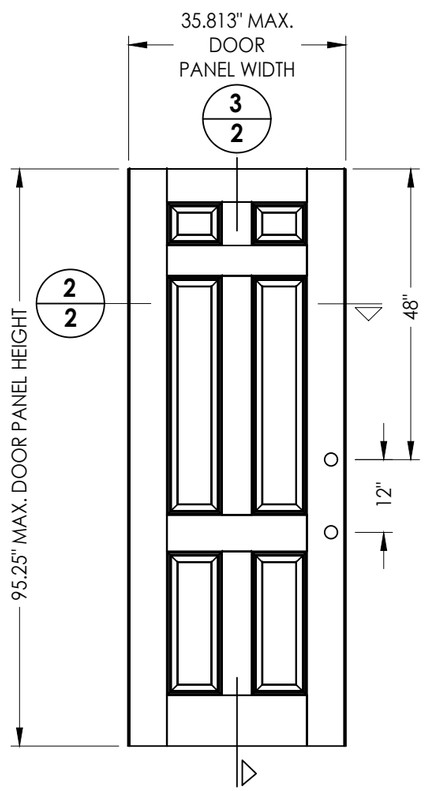


41 **DOOR PANEL**
Hybrid Door

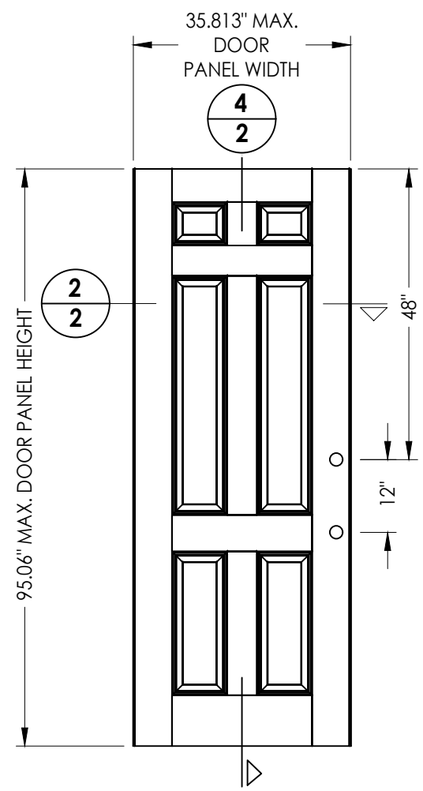


42 **DOOR PANEL**
U1 Door

***"Classic-Craft" SERIES DOOR PANEL***

FIBERGLASS DOOR SKIN: 0.125" MIN. THK.
FOAM CORE: POLYURETHANE FOAM (1.9 PCF MIN.)

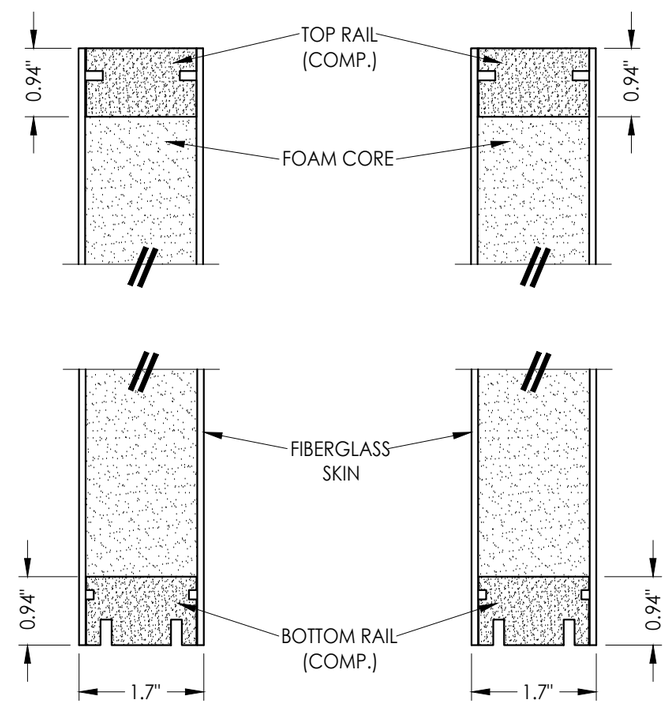


3/2 **VERTICAL CROSS SECTION**

4/2 **VERTICAL CROSS SECTION**


Documents Prepared By:
Lyndon F. Schmidt
P.E. No. 43409
RW BUILDING CONSULTANTS, INC.
P.O. Box 230, Valrico, FL 33595
Phone No.: 813.659.9197
FBPE Registry No. 9813


PRODUCT: *THERMA-TRU FIBERGLASS DOOR*

PART OR ASSEMBLY: *DOOR PANEL DETAILS*

REVISIONS

| NO. | DATE | | BY |
|---|---|---|---|
| 3 | 7/01/26 | UPDATE TO 9TH ED. (2026) FBC | LFS |
| 2 | 8/22/23 | UPDATE TO 8TH ED. (2023) FBC | LFS |
| 1 | 8/05/20 | UPDATE TO 7th ED (2020) FBC | LFS |

DATE: 3/25/20
SCALE: N.T.S.
DWG. BY: RW
CHK. BY: LFS
DRAWING NO.: FL-23955.6
SHEET 2 OF 13

© 2020 R.W. Building Consultants Inc.

Z:\2023 FBC Drawings\Therma-Tru\FL-23955 R4\FL-23955.4-6.dwg

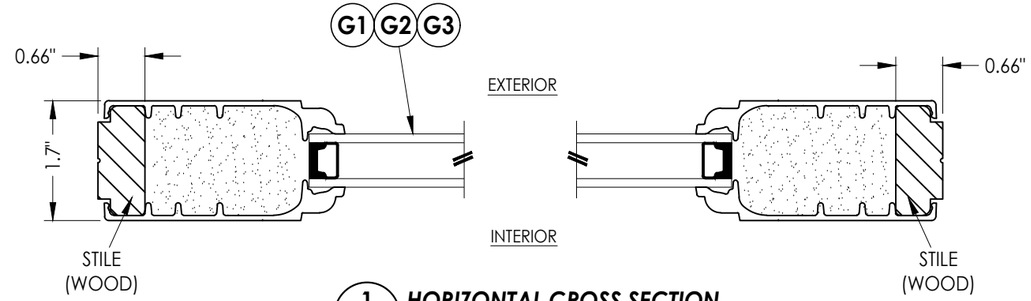


1/3 **HORIZONTAL CROSS SECTION**

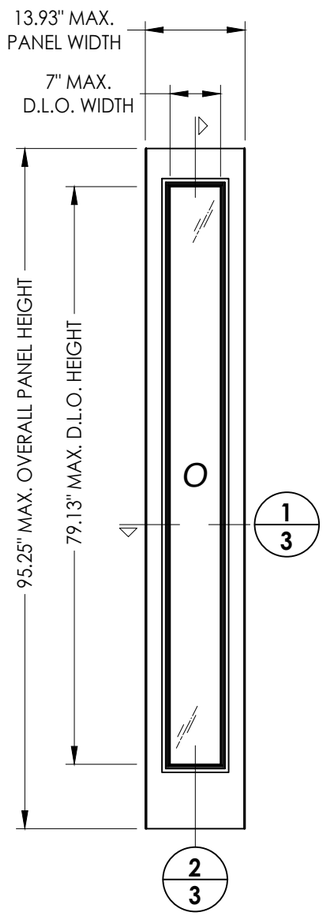


50 **SIDELITE PANEL**

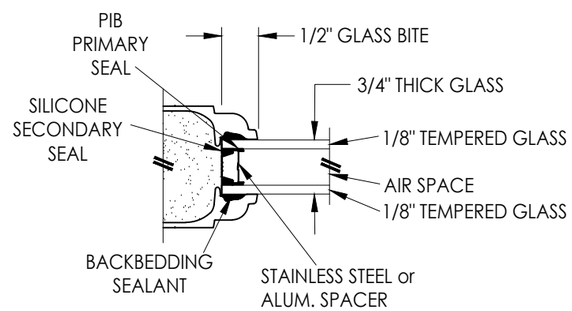


G1 **GLAZING DETAIL**
Flush Glazed

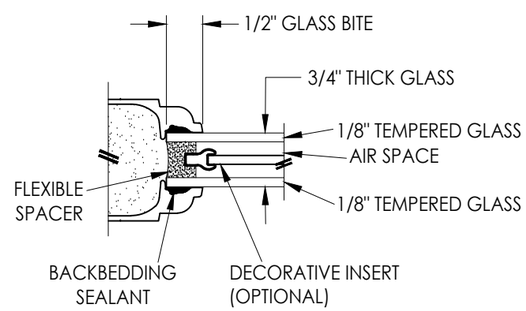


G2 **GLAZING DETAIL**
Flush Glazed
Decorative

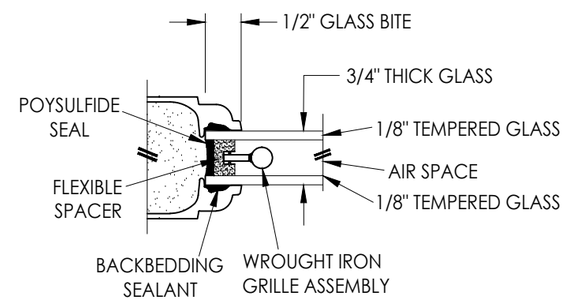


G3 **GLAZING DETAIL**
Flush Glazed
Wrought Iron

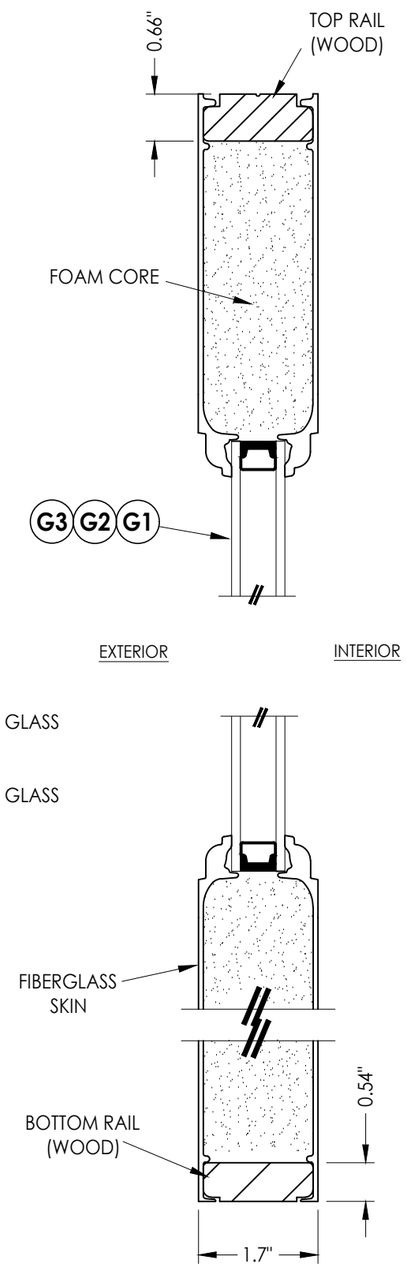


2/3 **VERTICAL CROSS SECTION**

## SIDELITE PANEL

FIBERGLASS SKIN: 0.070" MIN. THK.
FOAM CORE: POLYURETHANE FOAM (1.9 PCF MIN.)


Documents Prepared By:
Lyndon F. Schmidt
P.E. No. 43409
RW BUILDING CONSULTANTS, INC.
P.O. Box 230, Valrico, FL 33595
Phone No.: 813.659.9197
FBPE Registry No. 9813


PRODUCT: THERMA-TRU FIBERGLASS DOOR

PART OR ASSEMBLY: SIDELITE PANEL DETAILS

REVISIONS

| NO. | DATE | | BY |
|---|---|---|---|
| 3 | 7/01/26 | UPDATE TO 9TH ED. (2026) FBC | LFS |
| 2 | 8/22/23 | UPDATE TO 8TH ED. (2023) FBC | LFS |
| 1 | 8/05/20 | UPDATE TO 7th ED (2020) FBC | LFS |

DATE: 3/25/20
SCALE: N.T.S.
DWG. BY: RW
CHK. BY: LFS
DRAWING NO.: FL-23955.6
SHEET 3 OF 13

© 2020 R.W. Building Consultants Inc.

Z:\2023 FBC Drawings\Therma-Tru\FL-23955 R4\FL-23955.4-6.dwg

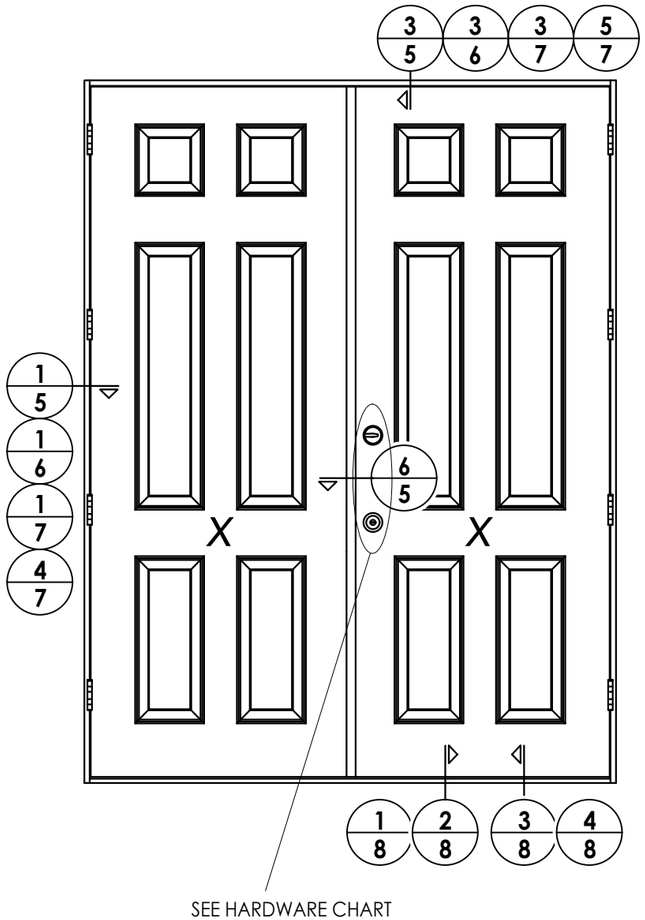


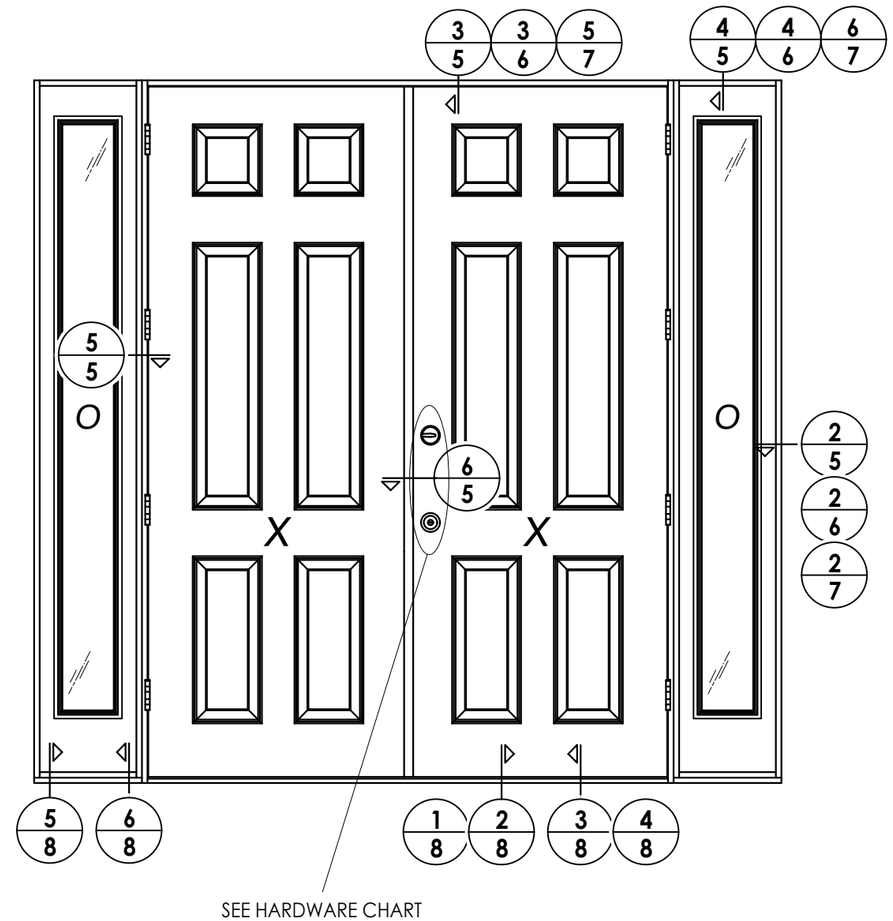


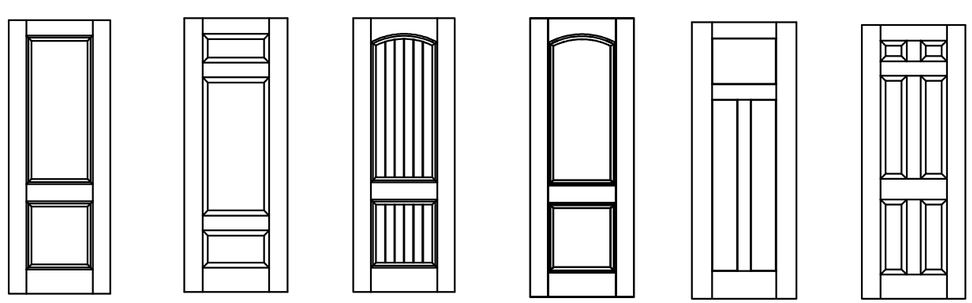

***Classic-Craft Door Panel Options***

Panel options shown are for illustration and are representative only
(similar opaque panel configurations are allowed)

| HARDWARE TABLE | | |
|---|---|---|
| MANUFACTURER | MODEL | |
| KWIKSET | KNOB: | SIGNATURE SERIES |
| | DEADBOLT: | SIGNATURE SERIES (780) |

Documents Prepared By:
Lyndon F. Schmidt
P.E. No. 43409

RW BUILDING CONSULTANTS, INC.
P.O. Box 230, Valrico, FL 33595
Phone No.: 813.659.9197
FBPE Registry No. 9813

PRODUCT: THERMA-TRU FIBERGLASS DOOR

PART OR ASSEMBLY: ELEVATIONS

REVISIONS

| NO. | DATE | | BY |
|---|---|---|---|
| 3 | 7/01/26 | UPDATE TO 9TH ED. (2026) FBC | LFS |
| 2 | 8/22/23 | UPDATE TO 8TH ED. (2023) FBC | LFS |
| 1 | 8/05/20 | UPDATE TO 7th ED (2020) FBC | LFS |

DATE: 3/25/20
SCALE: N.T.S.
DWG. BY: RW
CHK. BY: LFS
DRAWING NO.: FL-23955.6
SHEET 4 OF 13

© 2020 R.W. BUILDING CONSULTANTS INC.

Z:\2023 FBC Drawings\Therma-Tru\FL-23955 R4\FL-23955.4-6.dwg

Notes:
1. Sidelite assembly screws located 7" from top and 14" from bottom & 2 more screws equally spaced between (4 screws total per side jamb).
2. Sidelite assembly screws located 4" from each end (2 screws along head jamb).

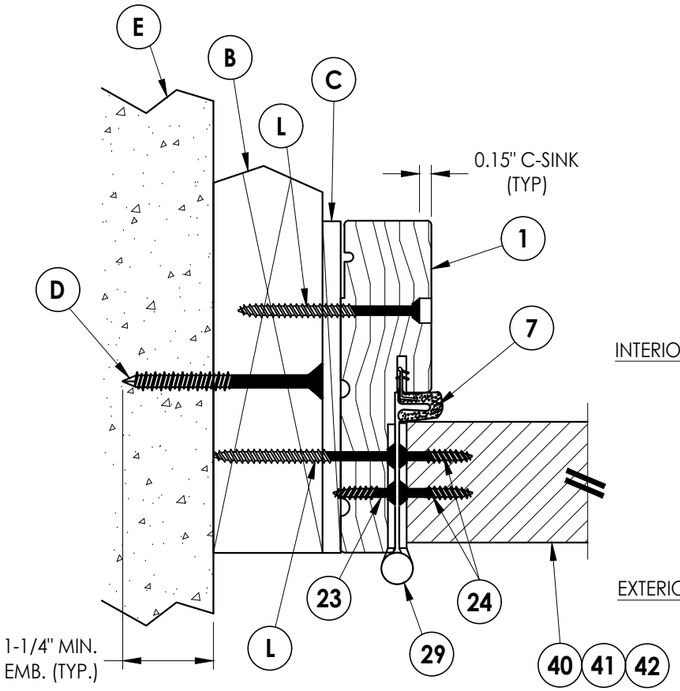


1/5 **HORIZONTAL CROSS SECTION**
Shown w/ 2X Buck
Outswing shown (Inswing similar)

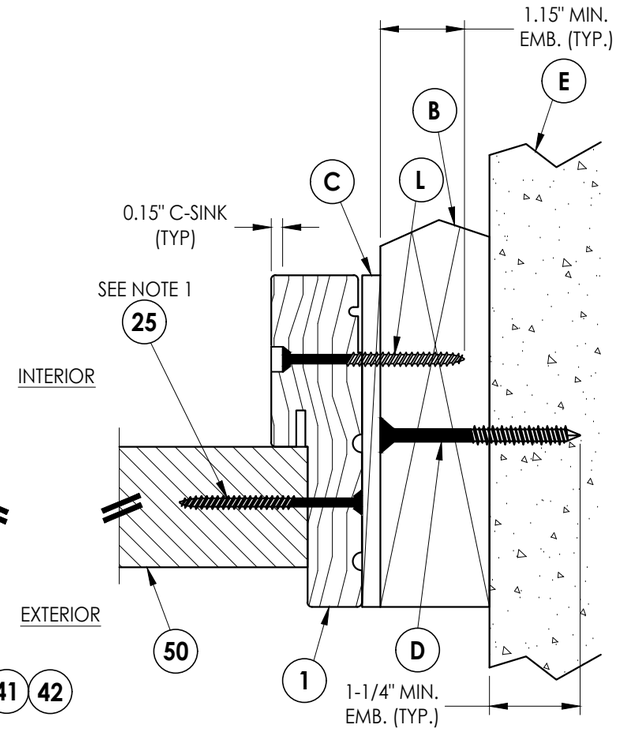


2/5 **HORIZONTAL CROSS SECTION**
Shown w/ 2X Buck
Outswing shown (Inswing similar)

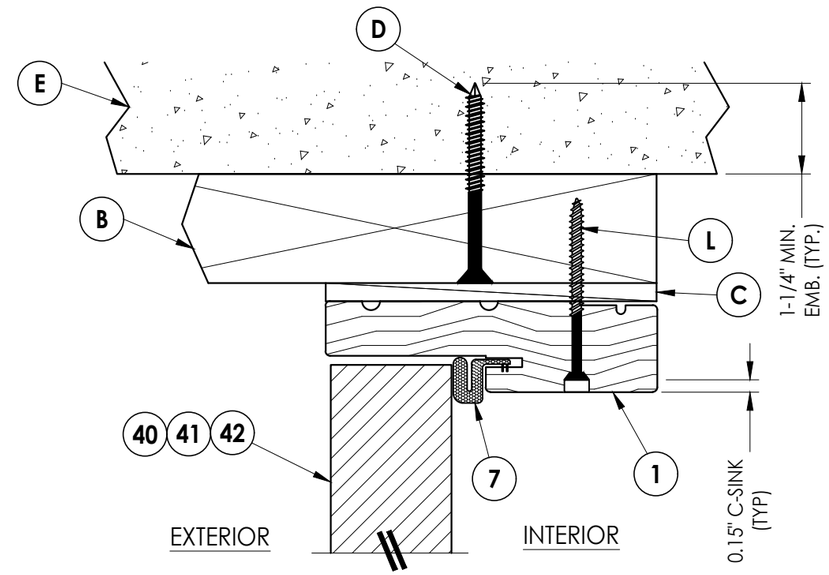


3/5 **VERTICAL CROSS SECTION**
Shown w/ 2X Buck
Outswing shown (Inswing similar)

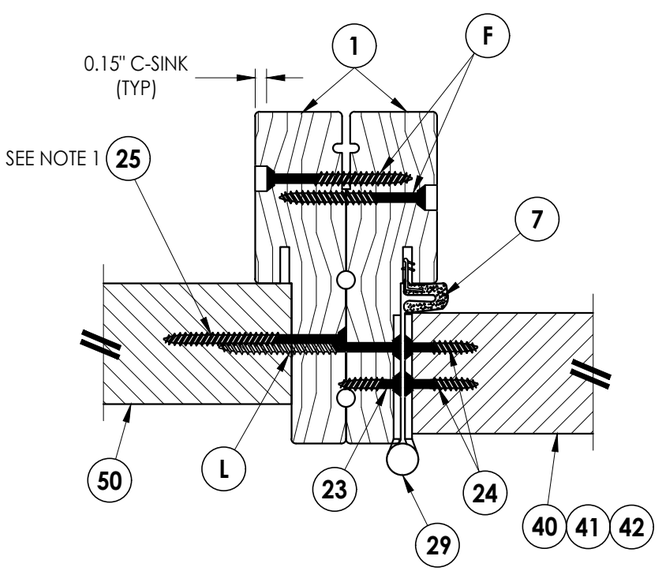


5/5 **HORIZONTAL CROSS SECTION**
Outswing shown (Inswing similar)

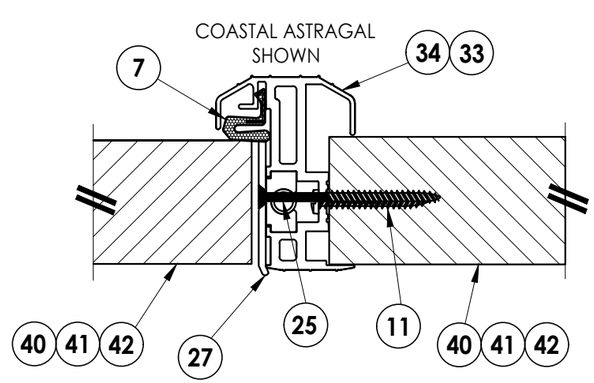


6/5 **HORIZONTAL CROSS SECTION**
Outswing shown (Inswing similar)

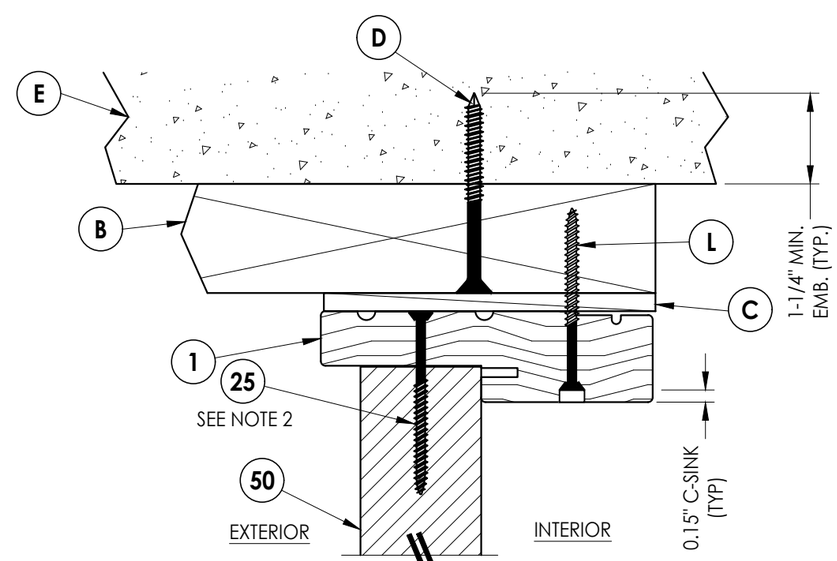


4/5 **VERTICAL CROSS SECTION**
Shown w/ 2X Buck
Outswing shown (Inswing similar)

Documents Prepared By:
Lyndon F. Schmidt
P.E. No. 43409


RW BUILDING CONSULTANTS, INC.
P.O. Box 230, Valrico, FL 33595
Phone No.: 813.659.9197
FBPE Registry No. 9813


PRODUCT: THERMA-TRU FIBERGLASS DOOR

PART OR ASSEMBLY: HORIZONTAL & VERTICAL CROSS SECTIONS (2X BUCK)

REVISIONS

| NO. | DATE | | BY |
|---|---|---|---|
| 3 | 7/01/26 | UPDATE TO 9TH ED. (2026) FBC | LFS |
| 2 | 8/22/23 | UPDATE TO 8TH ED. (2023) FBC | LFS |
| 1 | 8/05/20 | UPDATE TO 7th ED (2020) FBC | LFS |

DATE: 3/25/20
SCALE: N.T.S.
DWG. BY: RW
CHK. BY: LFS
DRAWING NO.: FL-23955.6
SHEET 5 OF 13

© 2020 R.W. BUILDING CONSULTANTS INC.

Z:\2023 FBC Drawings\Therma-Tru\FL-23955 R4\FL-23955.4-6.dwg

Notes:
1. Sidelite assembly screws located 7" from top and 14" from bottom & 2 more screws equally spaced between (4 screws total per side jamb).
2. Sidelite assembly screws located 4" from each end (2 screws along head jamb).

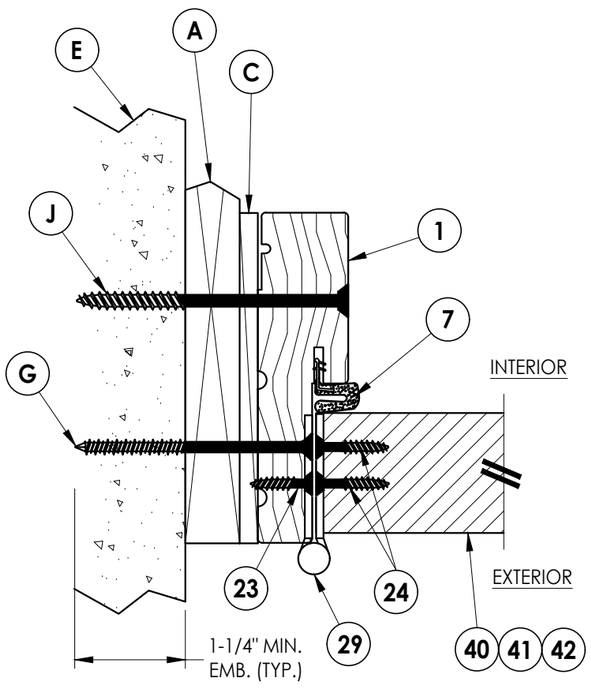


1/6 **HORIZONTAL CROSS SECTION**
Shown w/ 1X sub-buck
Outswing shown (Inswing similar)

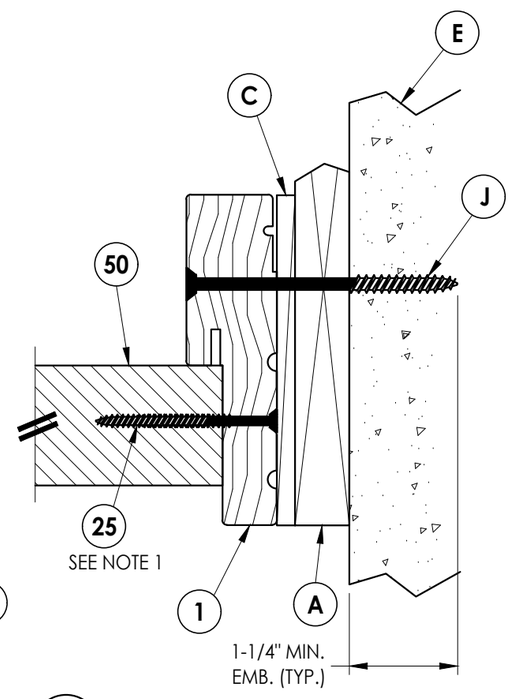


2/6 **HORIZONTAL CROSS SECTION**
Shown w/ 1X sub-buck
Outswing shown (Inswing similar)

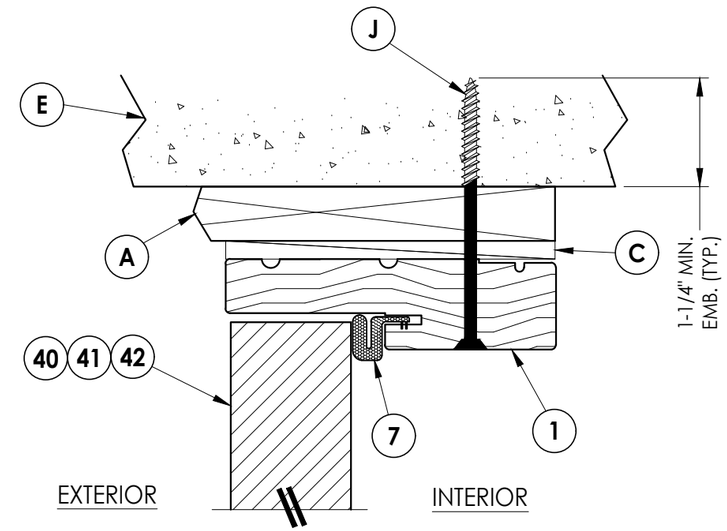


3/6 **VERTICAL CROSS SECTION**
Shown w/ 1X sub-buck
Outswing shown (Inswing similar)

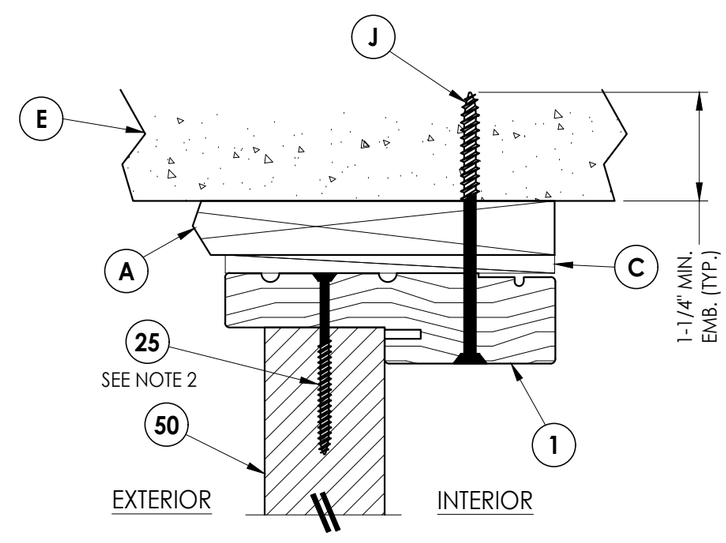


4/6 **VERTICAL CROSS SECTION**
Shown w/ 1X sub-buck
Outswing shown (Inswing similar)


Documents Prepared By:
Lyndon F. Schmidt
P.E. No. 43409
RW BUILDING CONSULTANTS, INC.
P.O. Box 230, Valrico, FL 33595
Phone No.: 813.659.9197
FBPE Registry No. 9813


PRODUCT: THERMA-TRU FIBERGLASS DOOR

PART OR ASSEMBLY: HORIZONTAL & VERTICAL CROSS SECTIONS (1X BUCK)

REVISIONS

| NO. | DATE | | BY |
|---|---|---|---|
| 3 | 7/01/26 | UPDATE TO 9TH ED. (2026) FBC | LFS |
| 2 | 8/22/23 | UPDATE TO 8TH ED. (2023) FBC | LFS |
| 1 | 8/05/20 | UPDATE TO 7th ED (2020) FBC | LFS |

DATE: 3/25/20
SCALE: N.T.S.
DWG. BY: RW
CHK. BY: LFS
DRAWING NO.: FL-23955.6
SHEET 6 OF 13

© 2020 R.W. Building Consultants Inc.

Z:\2023 FBC Drawings\Therma-Tru\FL-23955 R4\FL-23955.4-6.dwg

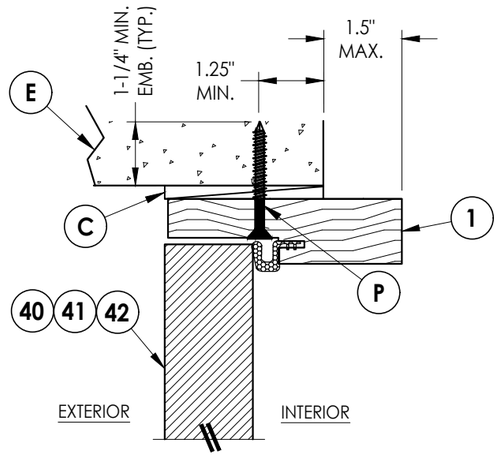


**3/7 VERTICAL CROSS SECTION**
Shown Direct to Masonry
Outswing only w/ 4-9/16" jamb
Double Door Only (N/A w/ Sidelites)

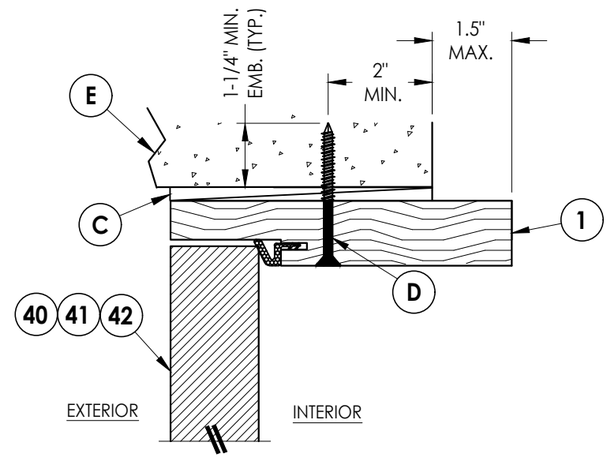


**5/7 VERTICAL CROSS SECTION**
Shown Direct to Masonry
Outswing only w/ 6-9/16" jamb

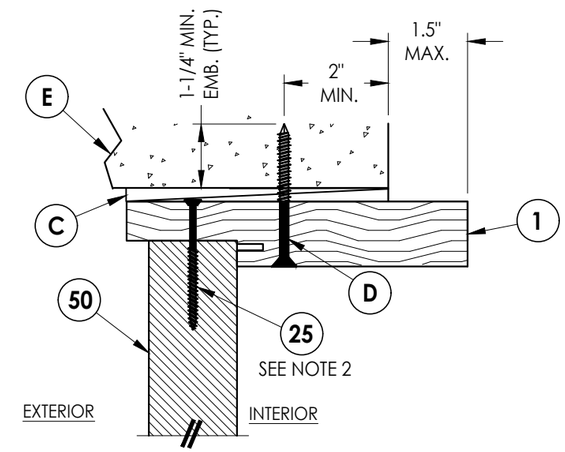


**6/7 VERTICAL CROSS SECTION**
Shown Direct to Masonry
Outswing only w/ 6-9/16" jamb

Notes:
1. Sidelite assembly screws located 7" from top and 14" from bottom & 2 more screws equally spaced between (4 screws total per side jamb).
2. Sidelite assembly screws located 4" from each end (2 screws along head jamb).

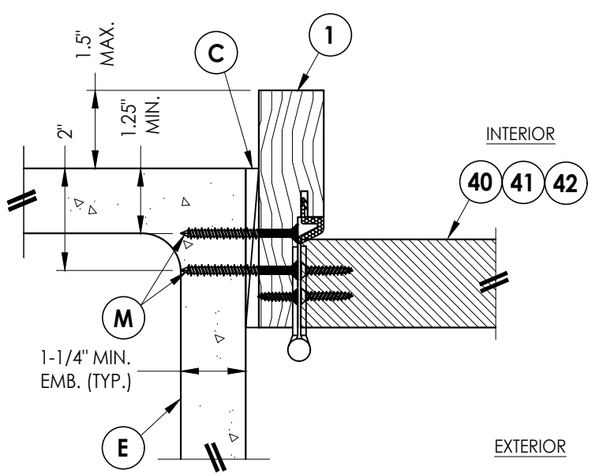


**1/7 HORIZONTAL CROSS SECTION**
Shown Direct to Masonry
Outswing only w/ 4-9/16" jamb
Double Door Only (N/A w/ Sidelites)

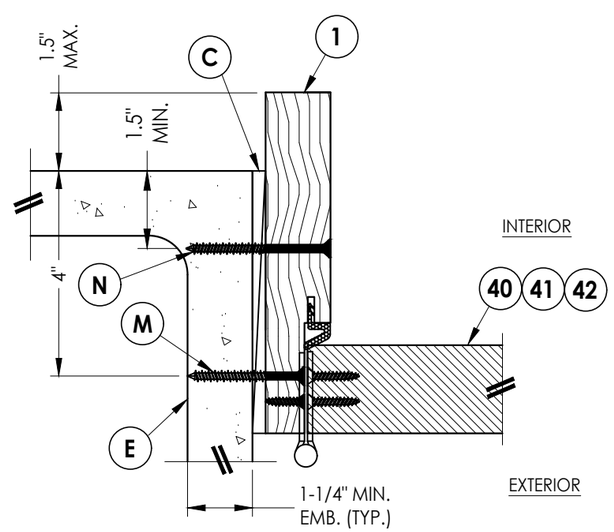


**4/7 HORIZONTAL CROSS SECTION**
Shown Direct to Masonry
Outswing only w/ 6-9/16" jamb

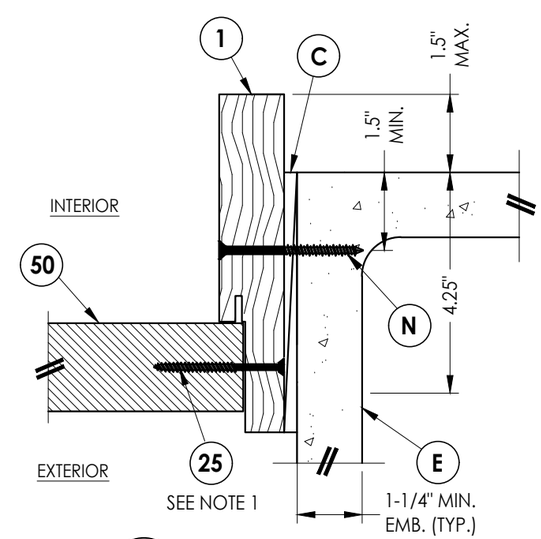


**2/7 HORIZONTAL CROSS SECTION**
Shown Direct to Masonry
Outswing only w/ 6-9/16" jamb


Documents Prepared By:
Lyndon F. Schmidt
P.E. No. 43409
RW BUILDING CONSULTANTS, INC.
P.O. Box 230, Valrico, FL 33595
Phone No.: 813.659.9197
FBPE Registry No. 9813


PRODUCT: THERMA-TRU FIBERGLASS DOOR

PART OR ASSEMBLY: HORIZONTAL & VERTICAL SECTIONS (DIRECT TO MASONRY)

REVISIONS

| NO. | DATE | | BY |
|---|---|---|---|
| 3 | 7/01/26 | UPDATE TO 9TH ED. (2026) FBC | LFS |
| 2 | 8/22/23 | UPDATE TO 8TH ED. (2023) FBC | LFS |
| 1 | 8/05/20 | UPDATE TO 7th ED (2020) FBC | LFS |

DATE: 3/25/20
SCALE: N.T.S.
DWG. BY: RW
CHK. BY: LFS
DRAWING NO.: FL-23955.6
SHEET 7 OF 13

© 2020 R.W. BUILDING CONSULTANTS INC.

Z:\2023 FBC Drawings\Therma-Tru\FL-23955 R4\FL-23955.4-6.dwg

Notes:
1. Sill Item #'s 13, 16, 17, 19 & 20 are attached to jambs w/ (3) #8 X 2-1/2" pfh screws at each end.
   Sill Item #'s 14 & 15 are attached to jambs w/ (2) #8 X 2-1/2" pfh screws at each end.
   Sill Item # 18 is attached to jambs utilizing (4) #10 X 1-1/2" pph screws at each end.
2. Sidelite assembly screws located 4" from each end (2 screws total along sill).

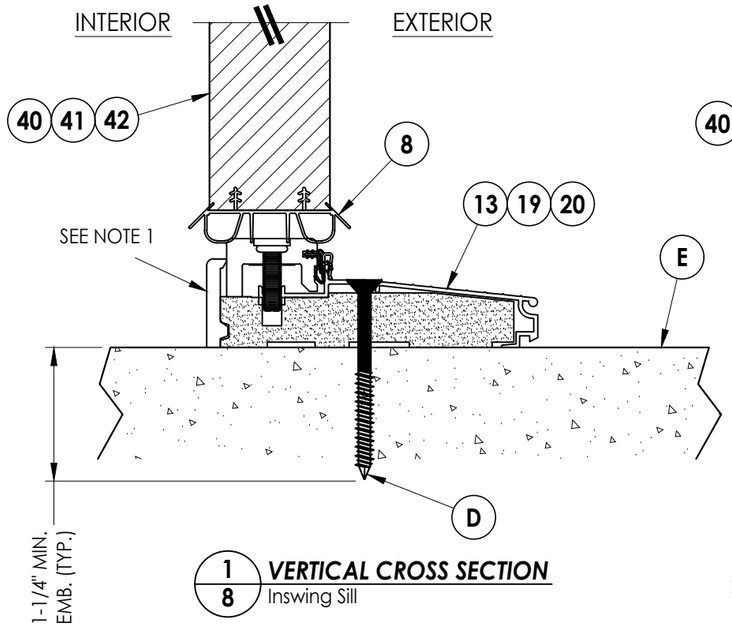


1/8 **VERTICAL CROSS SECTION**
Inswing Sill

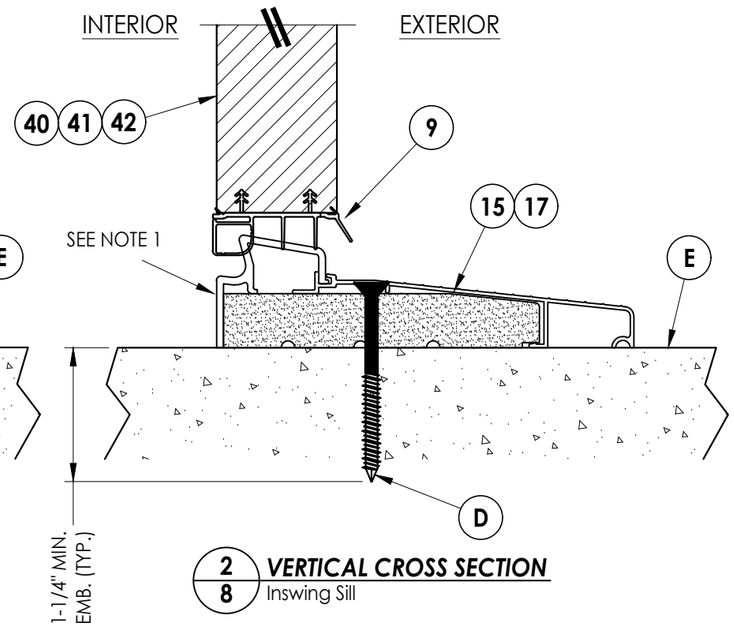


2/8 **VERTICAL CROSS SECTION**
Inswing Sill

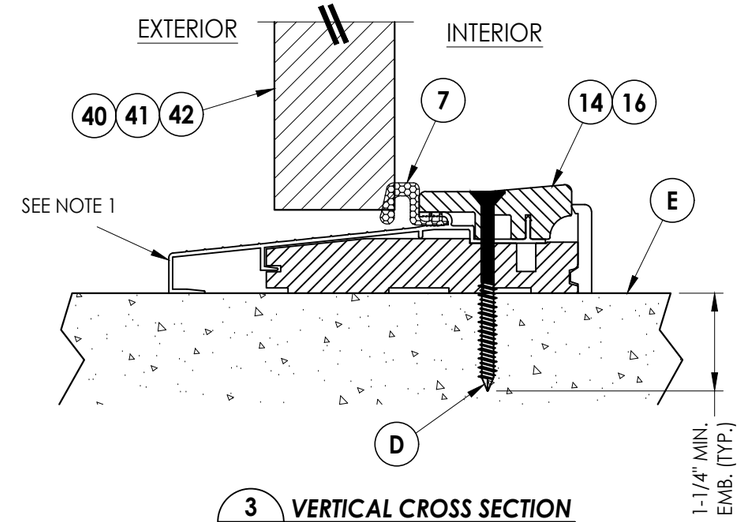


3/8 **VERTICAL CROSS SECTION**
Outswing Sill

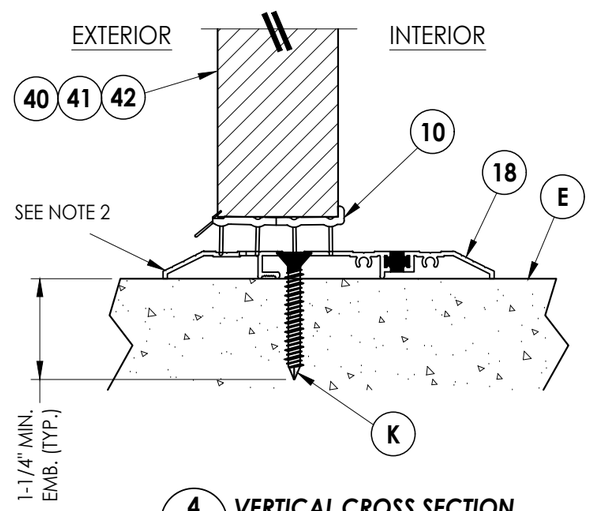


4/8 **VERTICAL CROSS SECTION**
Public Access Sill

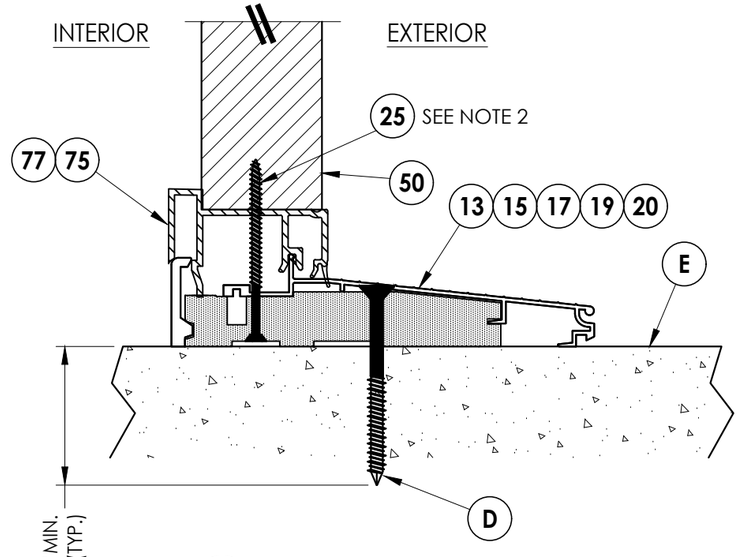


5/8 **VERTICAL CROSS SECTION**
Inswing Sill

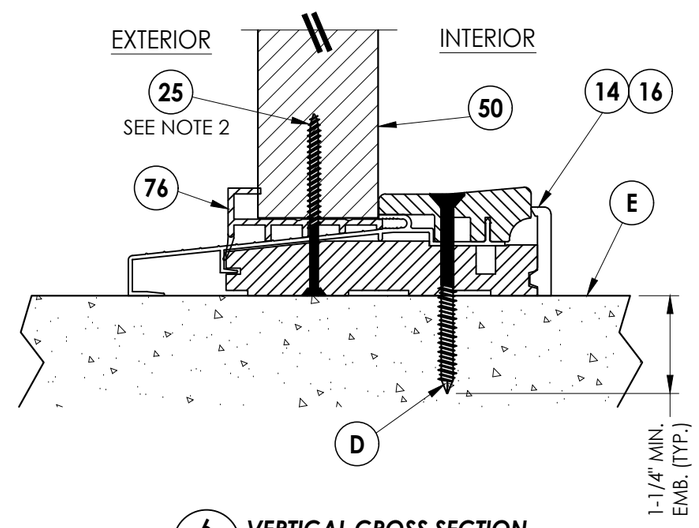


6/8 **VERTICAL CROSS SECTION**
Outswing Sill


Documents Prepared By:
Lyndon F. Schmidt
P.E. No. 43409

RW BUILDING CONSULTANTS, INC.
P.O. Box 230, Valrico, FL 33595
Phone No.: 813.659.9197
FBPE Registry No. 9813


PRODUCT: THERMA-TRU FIBERGLASS DOOR

PART OR ASSEMBLY: VERTICAL CROSS SECTIONS (THRESHOLDS)

REVISIONS

| NO. | DATE | | BY |
|---|---|---|---|
| 3 | 7/01/26 | UPDATE TO 9TH ED. (2026) FBC | LFS |
| 2 | 8/22/23 | UPDATE TO 8TH ED. (2023) FBC | LFS |
| 1 | 8/05/20 | UPDATE TO 7th ED (2020) FBC | LFS |

DATE: 3/25/20
SCALE: N.T.S.
DWG. BY: RW
CHK. BY: LFS
DRAWING NO.: FL-23955.6
SHEET 8 OF 13

© 2020 R.W. BUILDING CONSULTANTS INC.

Z:\2023 FBC Drawings\Therma-Tru\FL-23955 R4\FL-23955.4-6.dwg

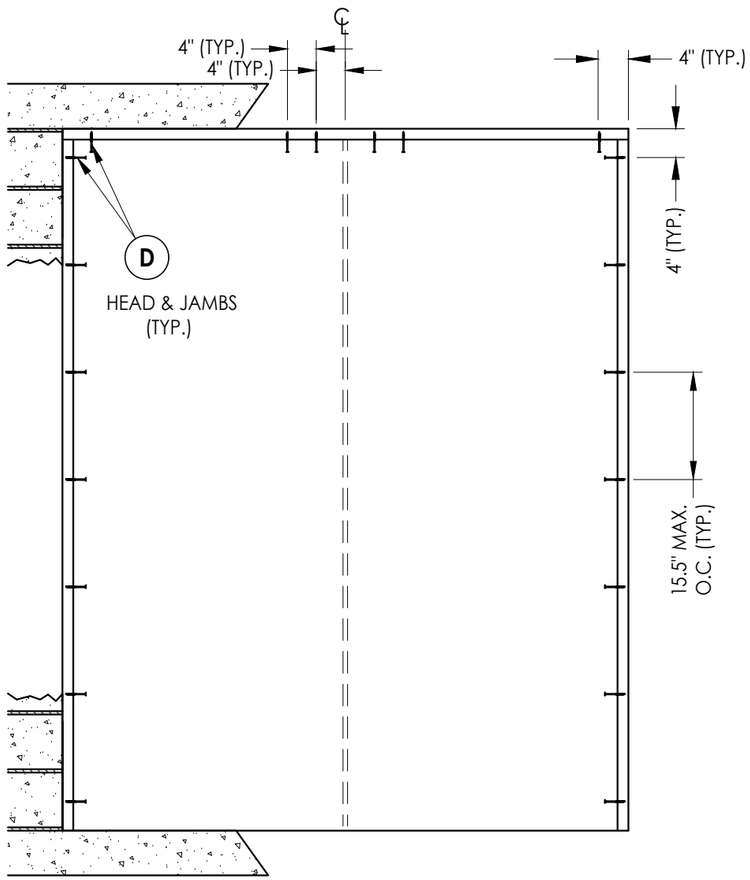


XX

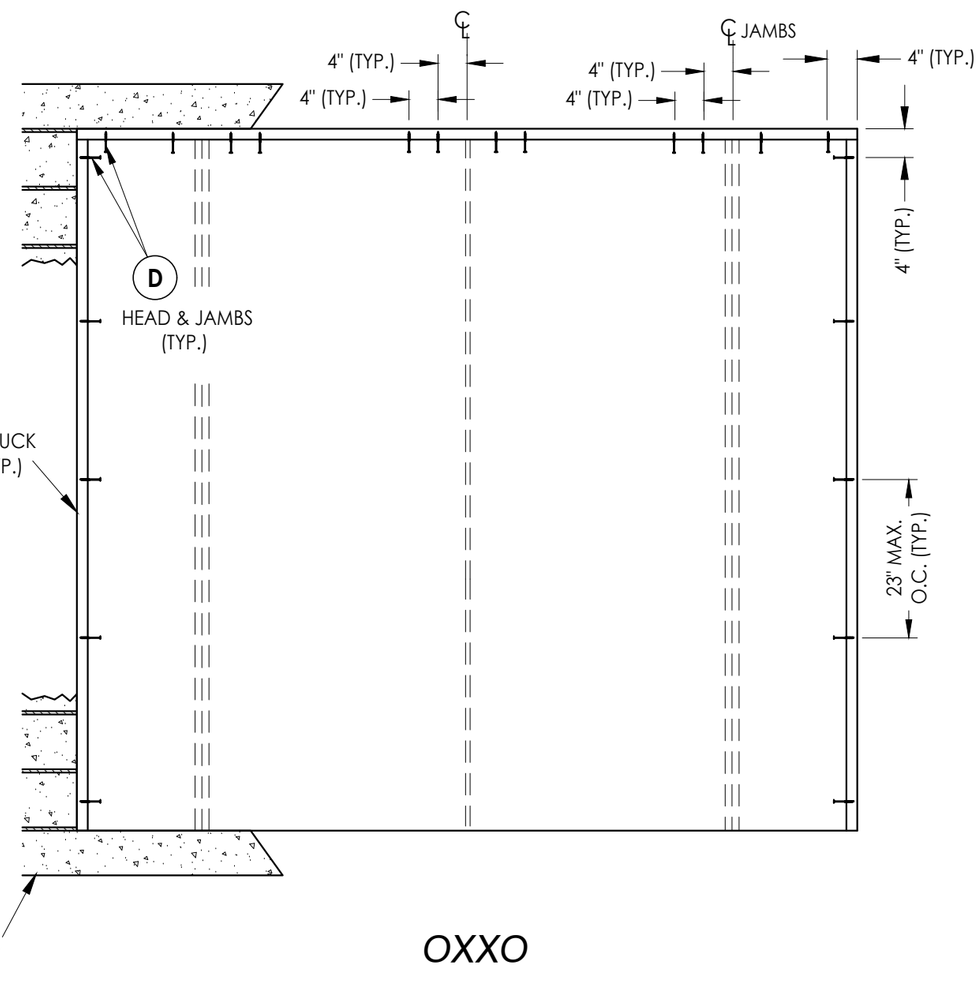


OXXO

## 2X BUCK ANCHORING

Documents Prepared By:
Lyndon F. Schmidt
P.E. No. 43409

RW BUILDING CONSULTANTS, INC.
P.O. Box 230, Valrico, FL 33595
Phone No.: 813.659.9197
FBPE Registry No. 9813

PRODUCT: THERMA-TRU FIBERGLASS DOOR

PART OR ASSEMBLY: BUCK ANCHORING

REVISIONS

| NO. | DATE | | BY |
|---|---|---|---|
| 3 | 7/01/26 | UPDATE TO 9TH ED. (2026) FBC | LFS |
| 2 | 8/22/23 | UPDATE TO 8TH ED. (2023) FBC | LFS |
| 1 | 8/05/20 | UPDATE TO 7th ED (2020) FBC | LFS |

DATE: 3/25/20
SCALE: N.T.S.
DWG. BY: RW
CHK. BY: LFS
DRAWING NO.: FL-23955.6
SHEET 9 OF 13

© 2020 R.W. BUILDING CONSULTANTS INC.

Z:\2023 FBC Drawings\Therma-Tru\FL-23955 R4\FL-23955.4-6.dwg

*NOTE: FRAME CORNERS @ HEAD ATTACHED TOGETHER w/ (3) #8 X 2-1/2" PFH WS (TYP.)

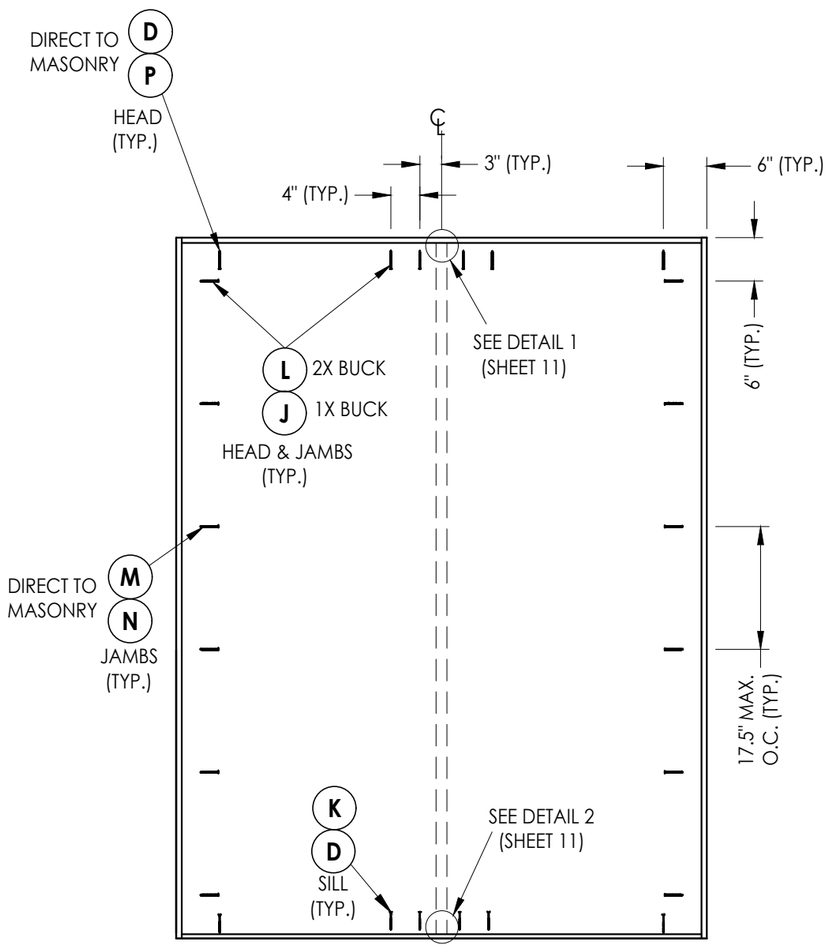


XX

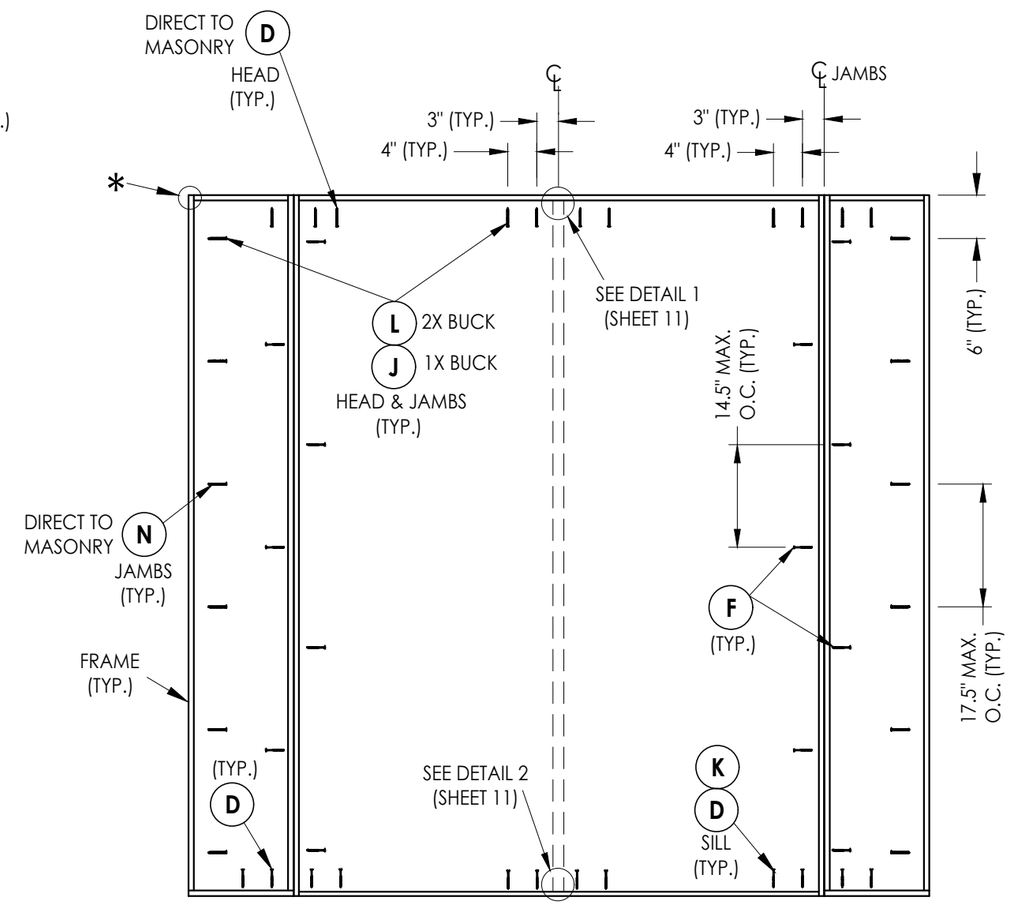


OXXO

## FRAME ANCHORING

Z:\2023 FBC Drawings\Therma-Tru\FL-23955 R4\FL-23955.4-6.dwg


Documents Prepared By:
Lyndon F. Schmidt
P.E. No. 43409
R.W. BUILDING CONSULTANTS, INC.
P.O. Box 230, Valrico, FL 33595
Phone No.: 813.659.9197
FBPE Registry No. 9813


PRODUCT: THERMA-TRU FIBERGLASS DOOR

PART OR ASSEMBLY: FRAME ANCHORING

REVISIONS

| NO. | DATE | BY |
|---|---|---|
| 3 | 7/01/26 | UPDATE TO 9TH ED. (2026) FBC | LFS |
| 2 | 8/22/23 | UPDATE TO 8TH ED. (2023) FBC | LFS |
| 1 | 8/05/20 | UPDATE TO 7th ED. (2020) FBC | LFS |

DATE: 3/25/20
SCALE: N.T.S.
DWG. BY: RW
CHK. BY: LFS
DRAWING NO.: FL-23955.6
SHEET 10 OF 13

© 2020 R.W. BUILDING CONSULTANTS INC.

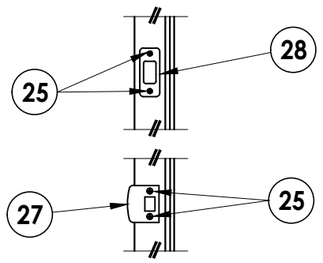


**LATCH & DEADBOLT DETAIL**

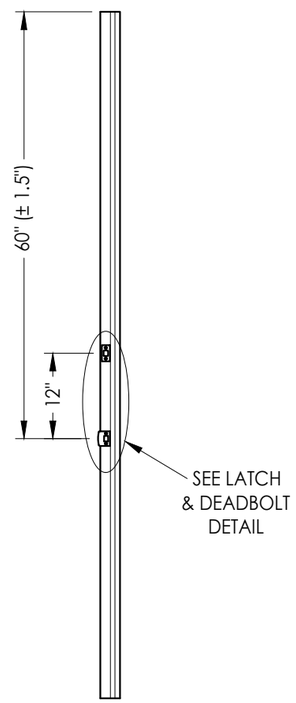


**ASTRAGAL**
Latch & Deadbolt

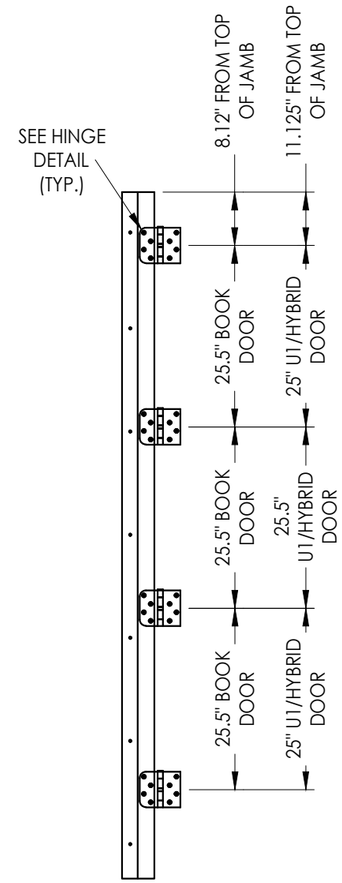


**HINGE JAMB**

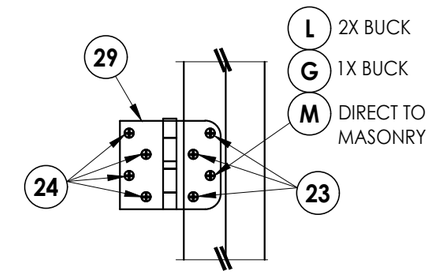


**HINGE DETAIL**

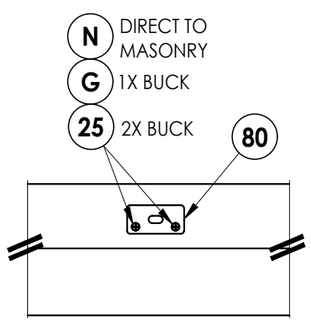


**DETAIL 1**
Coastal Astragal Strike Plate @ Head

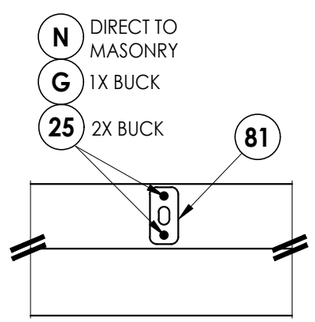


**DETAIL 1**
Standard Astragal Strike Plate @ Head

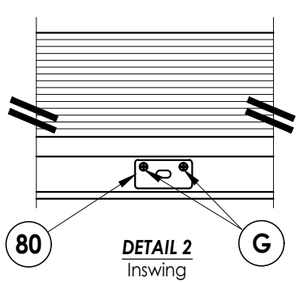


**DETAIL 2**
Inswing
Coastal Astragal Strike Plate @ Sill

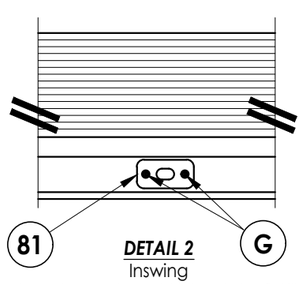


**DETAIL 2**
Inswing
Standard Astragal Strike Plate @ Sill

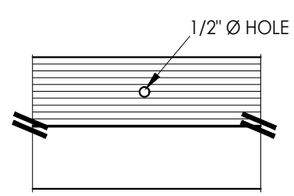


**DETAIL 2**
Outswing
Astragal Bolt Hole @ Sill

## LATCH & DEADBOLT STRIKE DETAILS

Documents Prepared By:
Lyndon F. Schmidt
P.E. No. 43409

RW BUILDING CONSULTANTS, INC.
P.O. Box 230, Valrico, FL 33595
Phone No.: 813.659.9197
FBPE Registry No. 9813

PRODUCT: THERMA-TRU FIBERGLASS DOOR

PART OR ASSEMBLY: HARDWARE DETAILS

| NO. | DATE | | BY |
|---|---|---|---|
| 3 | 7/01/26 | UPDATE TO 9TH ED. (2026) FBC | LFS |
| 2 | 8/22/23 | UPDATE TO 8TH ED. (2023) FBC | LFS |
| 1 | 8/05/20 | UPDATE TO 7th ED (2020) FBC | LFS |

REVISIONS

DATE: 03/25/20
SCALE: N.T.S.
DWG. BY: RW
CHK. BY: LFS
DRAWING NO.: FL-23955.6
SHEET 11 OF 13

© 2020 R.W. Building Consultants Inc.

Z:\2023 FBC Drawings\Therma-Tru\FL-23955 R4\FL-23955.4-6.dwg

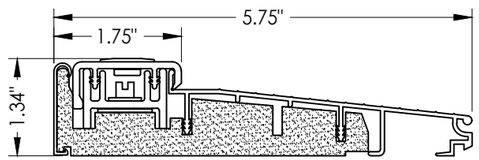


**13** ***INSWING THRESHOLD***
Adjustable

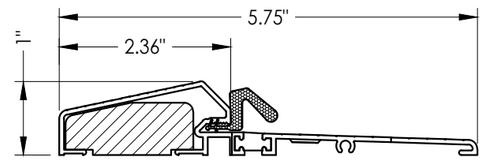


**14** ***OUTSWING THRESHOLD***

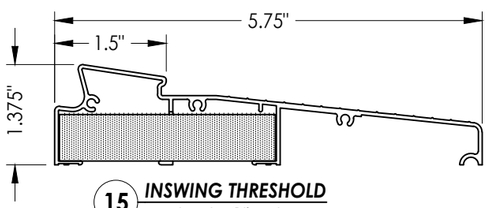


**15** ***INSWING THRESHOLD***
Moderate Climate

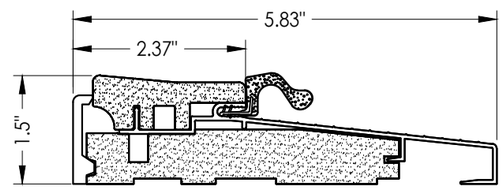


**16** ***OUTSWING THRESHOLD***

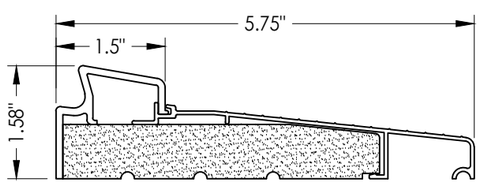


**17** ***INSWING THRESHOLD***
Basic Fixed

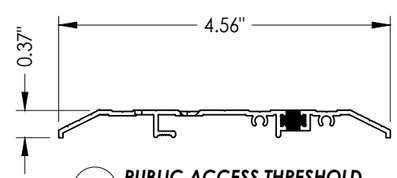


**18** ***PUBLIC ACCESS THRESHOLD***

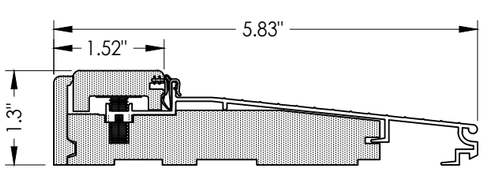


**19** ***INSWING THRESHOLD***
Adjustable

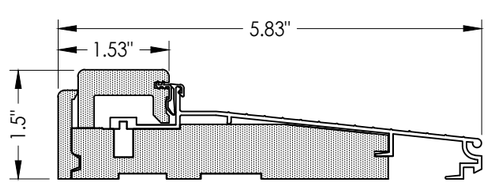


**20** ***INSWING THRESHOLD***
Adjustable

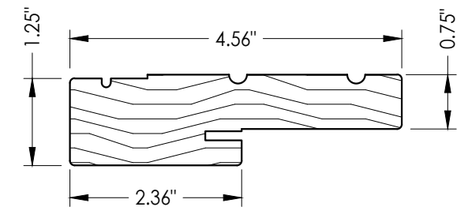


**1** ***WOOD JAMB***

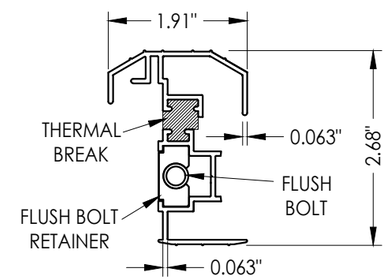


**33** ***STANDARD ALUMINUM ASTRAGAL***

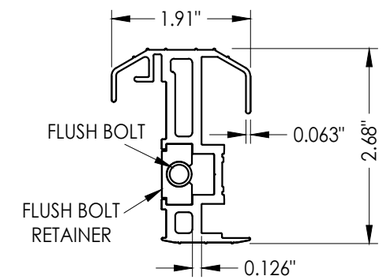


**34** ***COASTAL ALUMINUM ASTRAGAL***

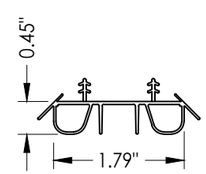


**8** ***SWEEP***

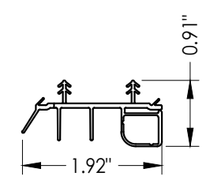


**9** ***SWEEP***

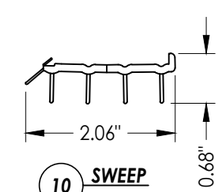


**10** ***SWEEP***

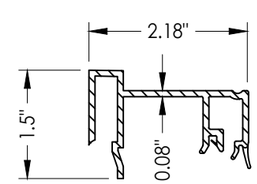


**75** ***SIDELITE SPACER***
Inswing

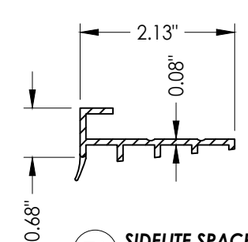


**76** ***SIDELITE SPACER***
Outswing

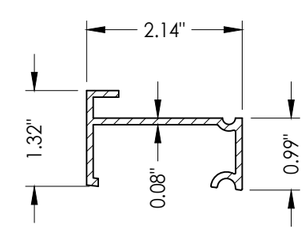


**77** ***INSWING SIDELITE***
Adapter
Moderate Climate Sill


Documents Prepared By:
Lyndon F. Schmidt
P.E. No. 43409
RW BUILDING CONSULTANTS, INC.
P.O. Box 230, Valrico, FL 33595
Phone No.: 813.659.9197
FBPE Registry No. 9813


PRODUCT: THERMA-TRU FIBERGLASS DOOR

PART OR ASSEMBLY: COMPONENTS

REVISIONS

| NO. | DATE | BY |
|---|---|---|
| 3 | 7/01/26 UPDATE TO 9TH ED. (2026) FBC | LFS |
| 2 | 8/22/23 UPDATE TO 8TH ED. (2023) FBC | LFS |
| 1 | 8/05/20 UPDATE TO 7th ED (2020) FBC | LFS |

DATE: 3/25/20
SCALE: N.T.S.
DWG. BY: RW
CHK. BY: LFS
DRAWING NO.: FL-23955.6
SHEET 12 OF 13


© 2020 R.W. BUILDING CONSULTANTS INC.


Z:\2023 FBC Drawings\Therma-Tru\FL-23955 R4\FL-23955.4-6.dwg

## BILL OF MATERIALS

| ITEM # | DESCRIPTION | MATERIAL |
|---|---|---|
| A | 1X BUCK (SG >= 0.42) | WOOD |
| B | 2X BUCK (SG >= 0.42) | WOOD |
| C | 1/4" MAX. SHIM SPACE | - |
| D | 1/4" X 2-3/4" PFH DeWALT OR ITW CONCRETE SCREW | STEEL |
| E | MASONRY - 3,000 PSI MIN. CONCRETE CONFORMING TO ACI 301 OR HOLLOW BLOCK CONFORMING TO ASTM C90 | CONCRETE |
| F | #10 X 2" PFH WOOD SCREW | STEEL |
| G | 3/16" X 3-1/4" PFH ITW CONCRETE SCREW | STEEL |
| J | 1/4" X 3-3/4" PFH DeWALT OR ITW CONCRETE SCREW | STEEL |
| K | 1/4" X 1-3/4" PFH DeWALT OR ITW CONCRETE SCREW | STEEL |
| L | #10 X 2-1/2" PFH WOOD SCREW (1.15" MIN. EMBEDMENT) | STEEL |
| M | 3/16" X 2-1/4" PFH ITW CONCRETE SCREW | STEEL |
| 1 | JAMB (FINGER JOINT PINE) | WOOD |
| 7 | WEATHERSTRIP | FOAM |
| 8 | SWEEP | VINYL |
| 9 | SWEEP (USE w/ MODERATE CLIMATE THRESHOLD) | VINYL |
| 10 | SWEEP (USE w/ PUBLIC ACCESS THRESHOLD) | VINYL |
| 13 | INSWING THRESHOLD | ALUM/COMP |
| 14 | OUTSWING THRESHOLD | ALUM/COMP |
| 15 | INSWING THRESHOLD | ALUM/COMP |
| 16 | OUTSWING THRESHOLD | ALUM/COMP |
| 17 | INSWING THRESHOLD | ALUM/COMP |
| 18 | PUBLIC ACCESS THRESHOLD | ALUM |
| 19 | INSWING THRESHOLD | ALUM/COMP |
| 20 | INSWING THRESHOLD | ALUM/COMP |
| 23 | #10 X 3/4" PFH WOOD SCREW | STEEL |
| 24 | #10 X 1" PFH WOOD SCREW | STEEL |
| 25 | #8 X 2-1/2" PFH WOOD SCREW | STEEL |
| 27 | LATCH STRIKE PLATE | STEEL |
| 28 | DEADBOLT STRIKE PLATE | STEEL |
| 29 | 4" X 4" HINGE | STEEL |
| 33 | STANDARD ALUMINUM ASTRAGAL | ALUM |
| 34 | COASTAL ALUMINUM ASTRAGAL | ALUM |
| 40 | DOOR PANEL (BOOK DOOR) | - |
| 41 | DOOR PANEL (HYBRID DOOR) | - |
| 42 | DOOR PANEL (U1 DOOR) | - |
| 50 | 14" SIDELITE PANEL | - |
| 75 | SIDELITE SPACER (INSWING) | PVC |
| 76 | SIDELITE SPACER (OUTSWING) | PVC |
| 77 | SIDELITE SPACER (INSWING) - Moderate Climate Sill | PVC |
| 80 | COASTAL ASTRAGAL STRIKE PLATE | STEEL |
| 81 | STANDARD ASTRAGAL STRIKE PLATE | STEEL |

**CORROSION RESISTANCE - SALTWATER ENVIRONMENT**

Fasteners & connectors in areas within 3000 ft (914 m) of a saltwater coastline shall comply with FBC Sections 1711.1 or R332.1.

*CONCRETE ANCHOR NOTES:*

1. *Concrete anchor locations at the corners may be adjusted to maintain the min. edge distance to mortar joints.*
2. *Concrete anchor locations noted as "MAX. ON CENTER" must be adjusted to maintain the min. edge distance to mortar joints, additional concrete anchors may be required to ensure the "MAX. ON CENTER" dimension are not exceeded.*
3. *Concrete anchor table:*

| ANCHOR TYPE | ANCHOR SIZE | MIN. EMBEDMENT | MIN. CLEARANCE TO MASONRY EDGE | MIN. CLEARANCE TO ADJACENT ANCHOR |
|---|---|---|---|---|
| ITW TAPCON® | 1/4" | 1-1/4" | 2" | 4" |
| DeWALT ULTRACON+® | 1/4" | 1-1/4" | 1" | 4" |
| ITW TAPCON® | 3/16" | 1-1/4" | AS SHOWN | 1-1/2" |

*WOOD SCREW INSTALLATION NOTES:*

1. *Maintain a minimum 5/8" edge distance, 1" end distance, & 1" o.c. spacing of wood screws to prevent the splitting of wood.*


Documents Prepared By:
Lyndon F. Schmidt
P.E. No. 43409

RW BUILDING CONSULTANTS, INC.
P.O. Box 230, Valrico, FL 33595
Phone No.: 813.659.9197
FBPE Registry No. 9813


PRODUCT: THERMA-TRU FIBERGLASS DOOR

PART OR ASSEMBLY: BILL OF MATERIALS

| NO. | DATE | REVISIONS | BY |
|---|---|---|---|
| 3 | 7/01/26 | UPDATE TO 9TH ED. (2026) FBC | LFS |
| 2 | 8/22/23 | UPDATE TO 8TH ED. (2023) FBC | LFS |
| 1 | 8/05/20 | UPDATE TO 7th ED (2020) FBC | LFS |

DATE: 3/25/20
SCALE: N.T.S.
DWG. BY: RW
CHK. BY: LFS
DRAWING NO.: FL-23955.6
SHEET 13 OF 13


© 2020 R.W. Building Consultants Inc.



Z:\2023 FBC Drawings\Therma-Tru\FL-23955 R4\FL-23955.4-6.dwg